EDGEMAX BACKLIGHT LED STRIP

BM-LED-PLS-12V-3W20-2835-540-12-YT170

DESCRIPTION

❖ CHARACTERS

LED diffuse reflection light bar is equipped with optical wide-angle lenses for even light scattering and spot elimination. It features stable heat dissipation, energy efficiency and long service life. Suitable for fabric light boxes, storefront signs and stretch ceilings, it supports various color temperatures and allows flexible layout during installation.

❖ APPLICATION AREA

❖ Video advertising display

❖ Mall, large advertising display

❖ High-grade LED advertising, display card

❖ High-end supermarket display shelves, traffic light layout

SUMMARY

❖ PCB size	540*20mm
❖ Emitting angle	170°
❖ Voltage	12V
❖ Color	White
❖ LED Q'ty	12pcs

CERTIFICATION

The certification types will be increased as needed. You can contactour company's salesperson to learn more.

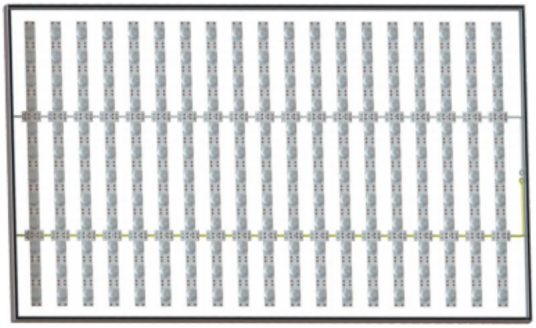

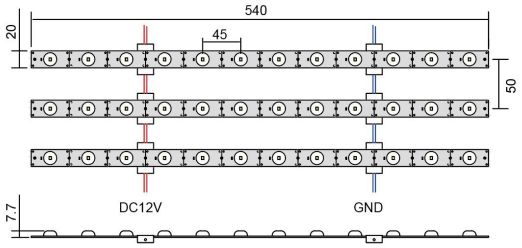





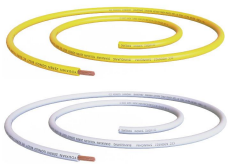

ITEM		MODEL
		BM-LED-PLS-12V-3W20-2835-540-12-YT170
LED Features	LED compound mode	1 Cascade 12 parallel
	Minimum truncation size	45mm
	Lamp bead (center) spacing	45mm
	LED Part No	LED2835
	LED Chip No	San an
	LED current	30mA
	Tc（k）Or Wavelength λd（nm）	5000K-7000K
	LED Color	White
	LED lumen	35-40LM
Technical Request	Working environment	-20~50 30%-70%
	storage condition	-20~50 30%-70%
	Work frequency	50/60Hz
	Work voltage range	12±0.5
	Max input current	300±10%
	Output power	3.6±10%
	LED Lumen	180±10%

There' re two type operation method for this LED strip , one is dimmable ,the other is not dimmable, as below.

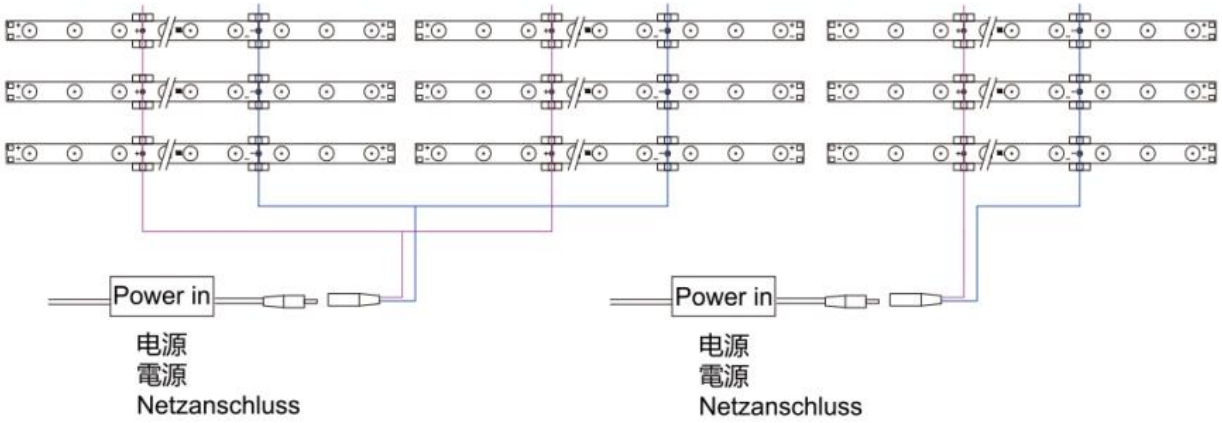

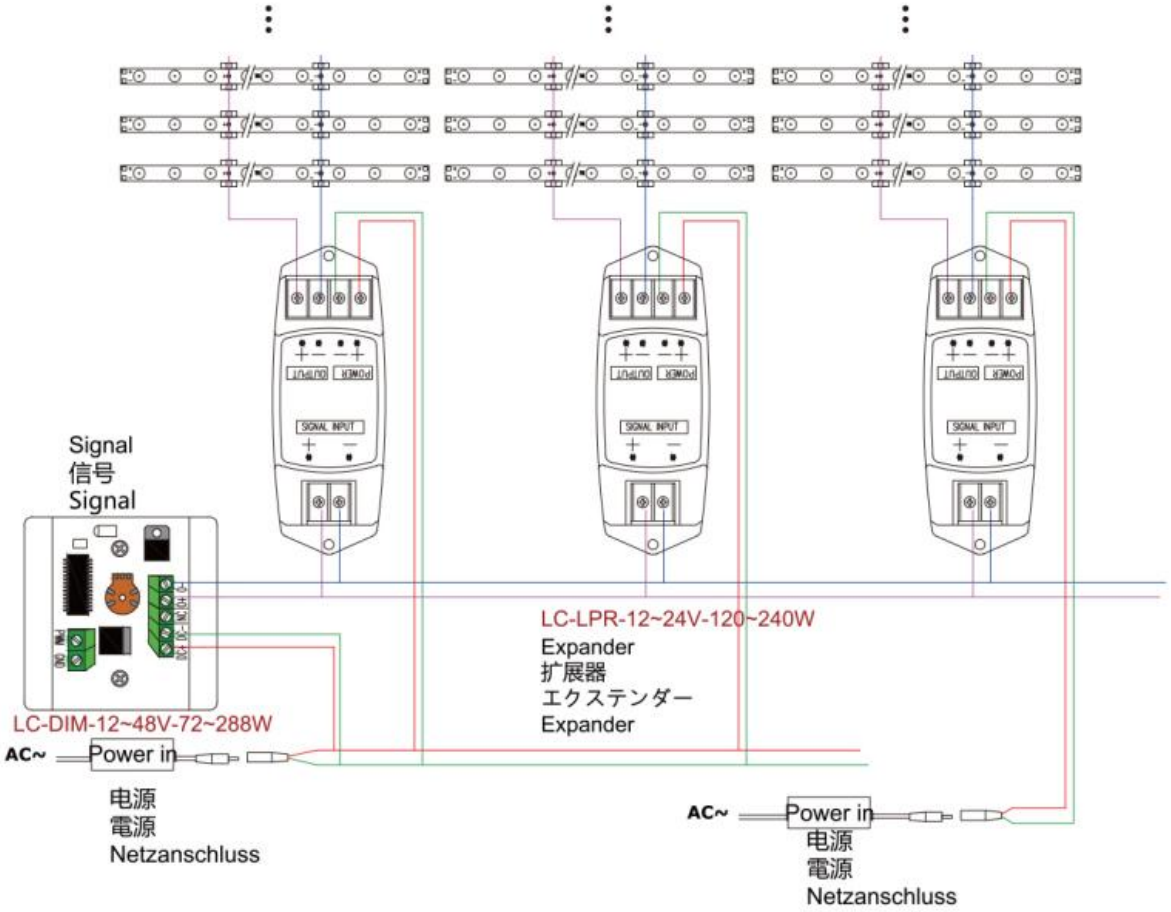
Signal
信号
Signal
LC-DIM-12~48V-72~288W
AC~
Power in
电源
電源
Netzanschluss
LC-LPR-12~24V-120~240W
Expander
扩展器
エクステンダー
Expander
AC~
Power in
电源
電源
Netzanschluss

描述

特征

LED 漫反射灯条搭载光学广角透镜，光线散射均匀、消除光斑，散热稳定、节能耐用。适配软膜灯箱、门头招牌、软膜天花，支持多种色温，安装排布灵活。

概要

- ❖ 产品尺寸 540*20mm
- ❖ 发光角度 170°
- ❖ 电压 12V
- ❖ 颜色 白色
- ❖ 灯珠数量 12颗

应用领域

- ❖照明发光
- ❖灯箱应用
- ❖高档LED广告、展示牌光源

认证

认证种类将会增加，请联系本公司业务。

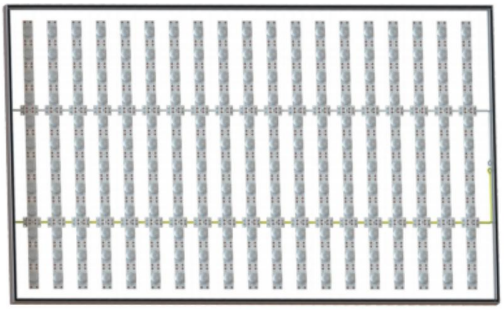

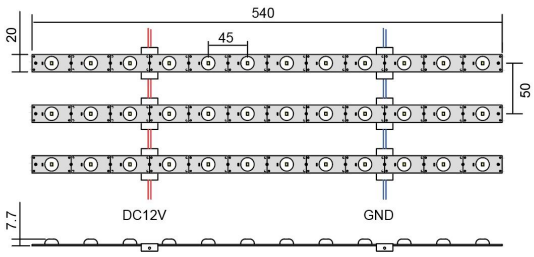





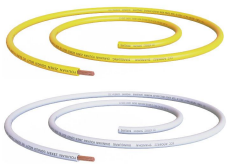

说明		型号
		BM-LED-PLS-12V-3W20-2835-540-12-YT170
LED参数	LED 组合方式	1 串 12 并
	最小截断尺寸	45mm
	灯珠(中心)间距	45mm
	LED 型号	2835
	LED 芯片	三安
	LED 电流	30mA
	LED 波长或（波长）	5000K-7000K
	LED 颜色	正白
	LED 流明	35-40LM
光学参数	工作环境温湿度	-20~50 30%-70%
	储存条件温湿度	-20~50 30%-70%
	工作频率	50/60Hz
	工作电压范围	24±0.5V
	输入电流	300±10%mA
	功耗	3.6±10%W
	LED 流明	180±10%LM

此款灯条可选调光和不调光方式选择，调光方式见下图，不调光直接去掉调光器即可

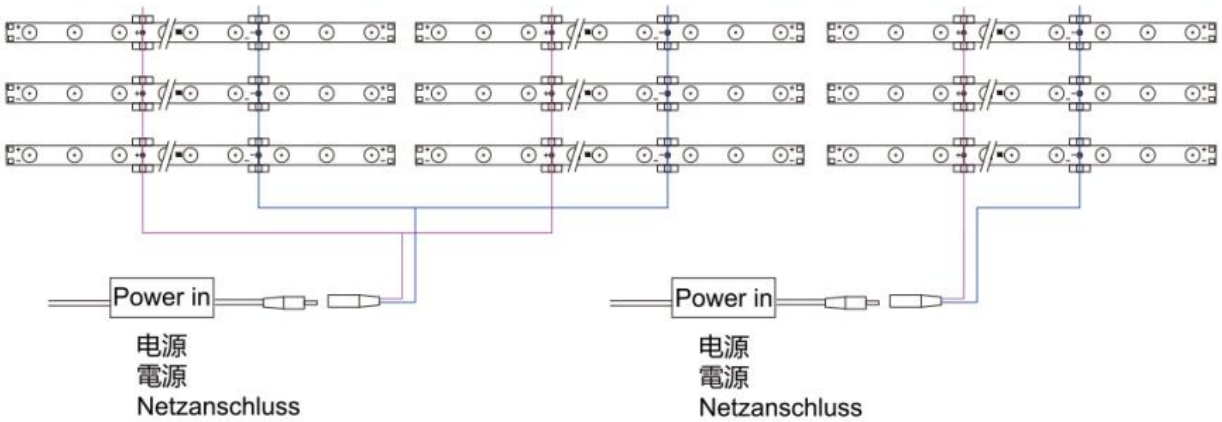

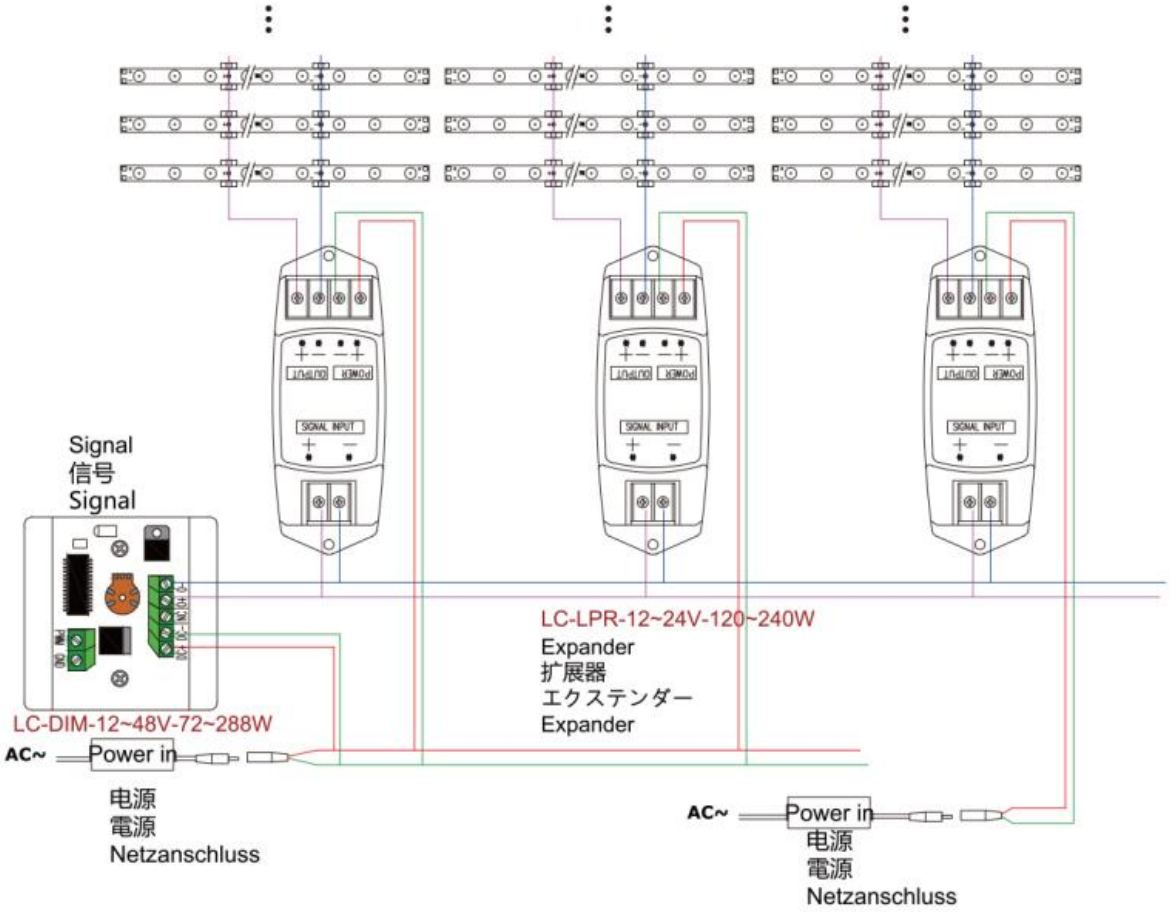
Signal
信号
Signal
LC-DIM-12~48V-72~288W
AC~
Power in
电源
電源
Netzanschluss
LC-LPR-12~24V-120~240W
Expander
扩展器
エクステンダー
Expander
AC~
Power in
电源
電源
Netzanschluss